Assembly Instructions

Oak Loop Wall Shelf Medium

ROPO no:

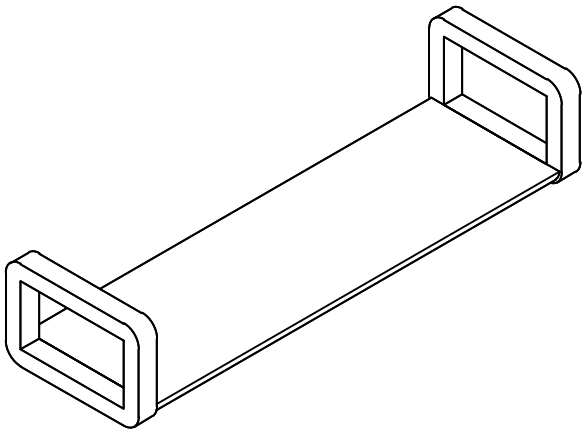

PLEASE READ THESE INSTRUCTIONS VERY CAREFULLY BEFORE YOU BEGIN,TO ENSURE THAT YOUR FUTON COMPANY PRODUCT WILL GIVE YOU MANY YEARS OF SATISFACTION

Thank you for buying Futon Company product

We are constantly striving to improve everything we do, but very occasionally mistakes do occur.

In the unlikely event that you find any part missing please call your nearest Futon Company store and we will arrange for the despatch of an immediate replacement.

Please keep all packaging until you have checked every part and assembly of your Futon Company product is complete.

Version number: 1 Product code: ST SHLF WALL LOOP MED Date: 29/08/25

experts in small space living

Parts Checklist

Please count and check every component very carefully before you begin

① Right Side x 1

② Left Side x 1

③ Shelf x 1

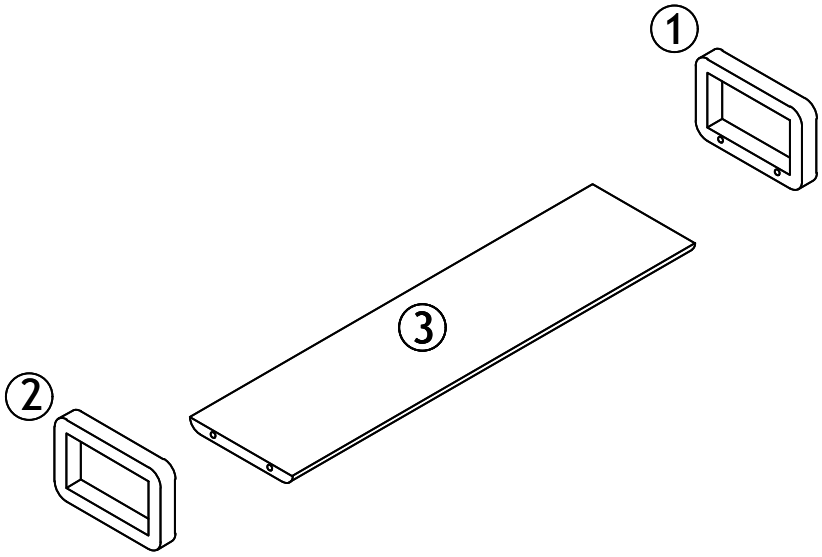

Fittings Checklist

Please count and check every component very carefully before you begin

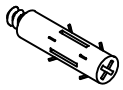

ⓐ Bolt x 4

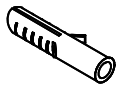

ⓑ Wooden Block x 2

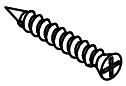

ⓒ Short Screw x 2

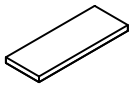

ⓓ Extra Wood piece x 1

To hang your Shelf correctly use the paper template. The distance between the two holes is 575 ± 2mm When tightening screws make sure they are close to the wall so the Shelf is tight to the wall when hung on keyhole plates.

ⓔ paper template x 1

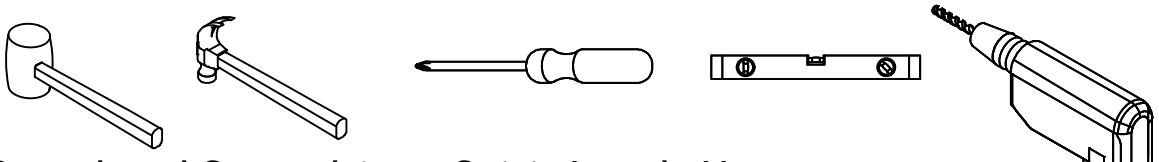

*** Cross head Screwdriver, Spirit Level, Hammer, Mallet and Drill also required for assembly.

How To Assemble Your Shelf

Please follow these instructions carefully

To prevent scratching: Lay the parts face down on a clean, flat, soft surface.

1.

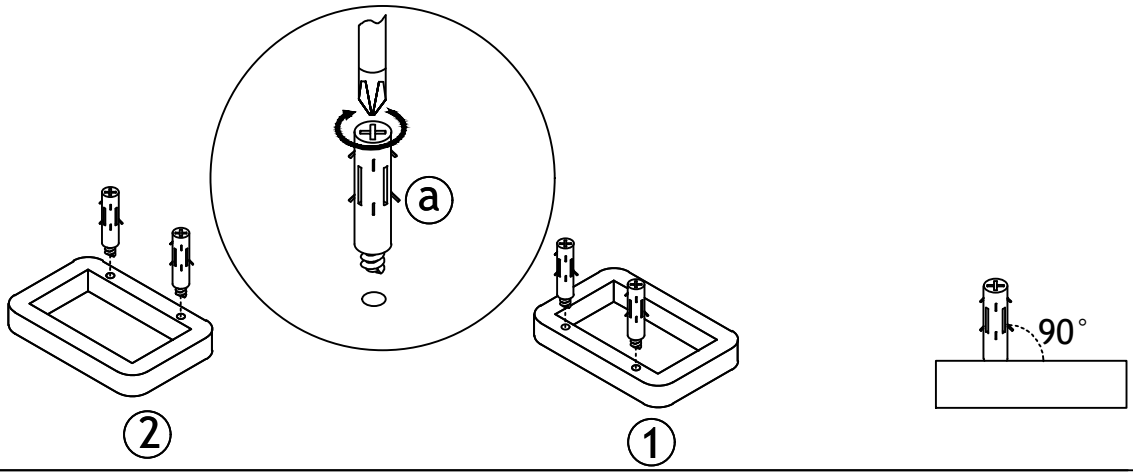

2.

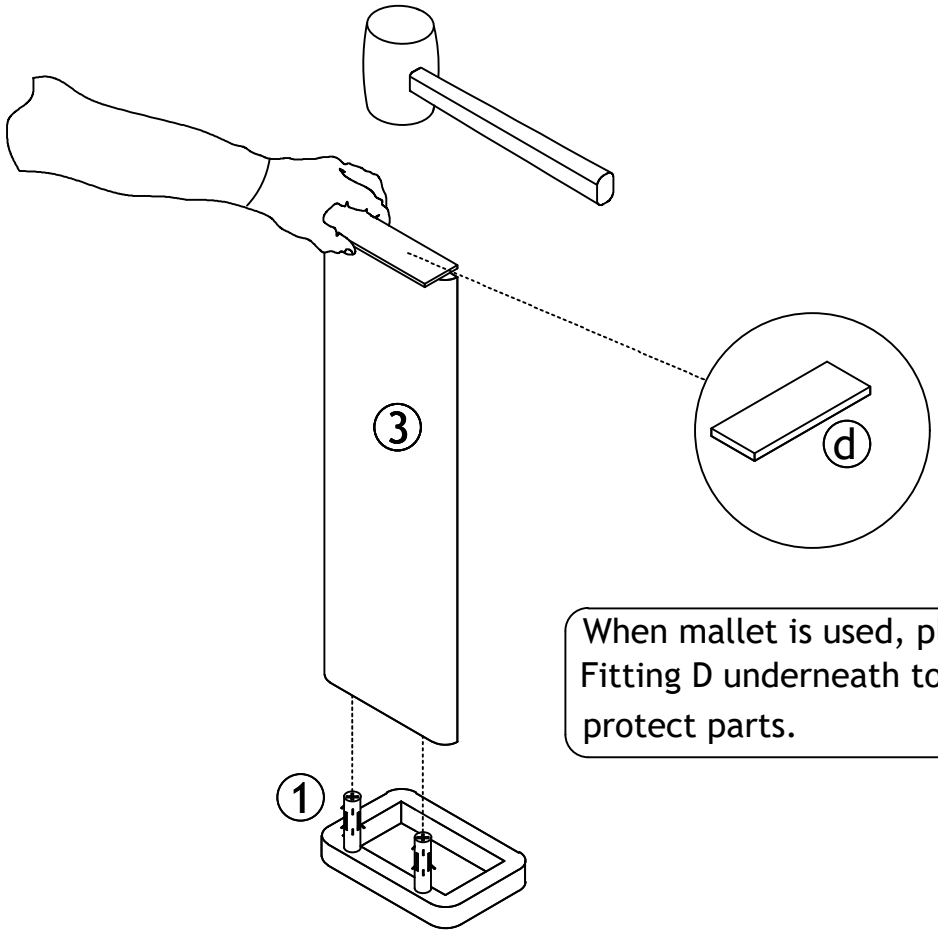

When mallet is used, place Fitting D underneath to protect parts.

How To Assemble Your Shelf

Please follow these instructions carefully

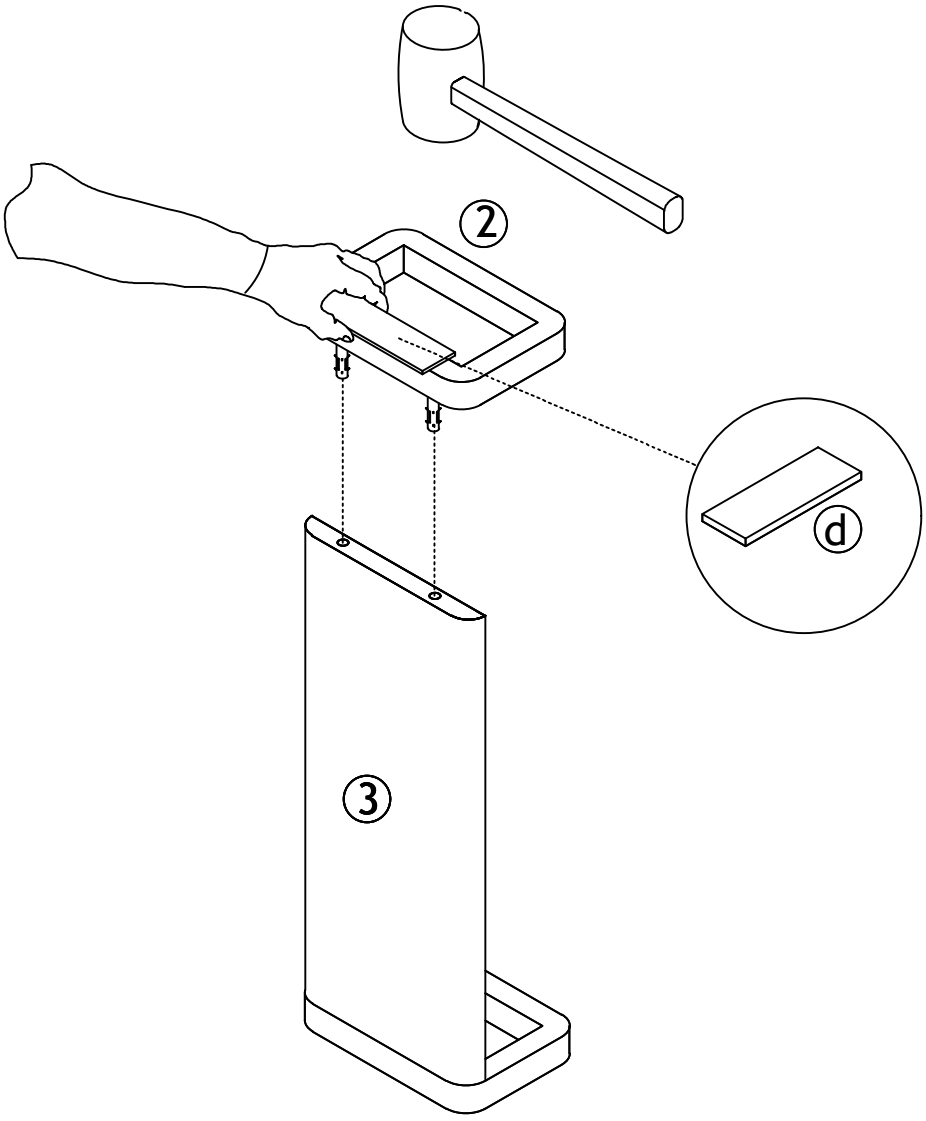

When mallet is used, place Fitting D underneath to protect parts.

How To Hang Your Shelf

Please follow these instructions carefully

Fittings to attach your shelf to the wall are supplied. But different wall constructions require fittings that are suitable for your wall type.

If you are unsure for the correct type of fitting for your wall, please contact your local specialised hardware store for information on suitable fitting.

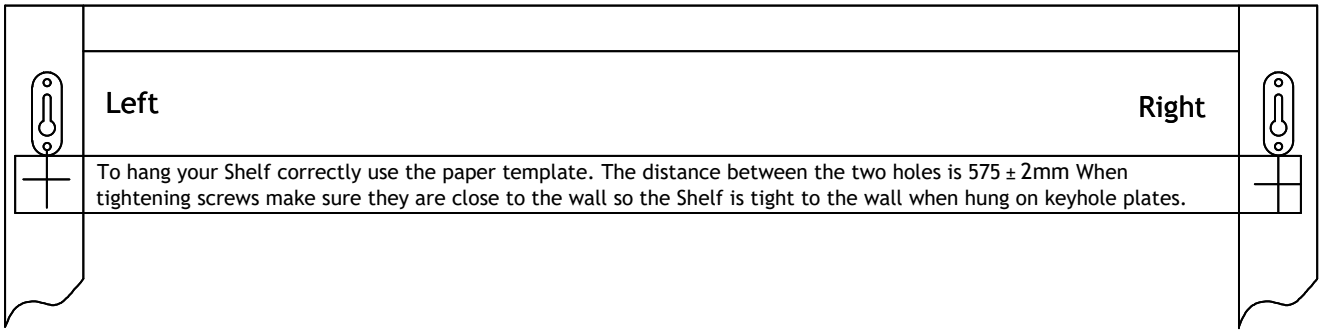

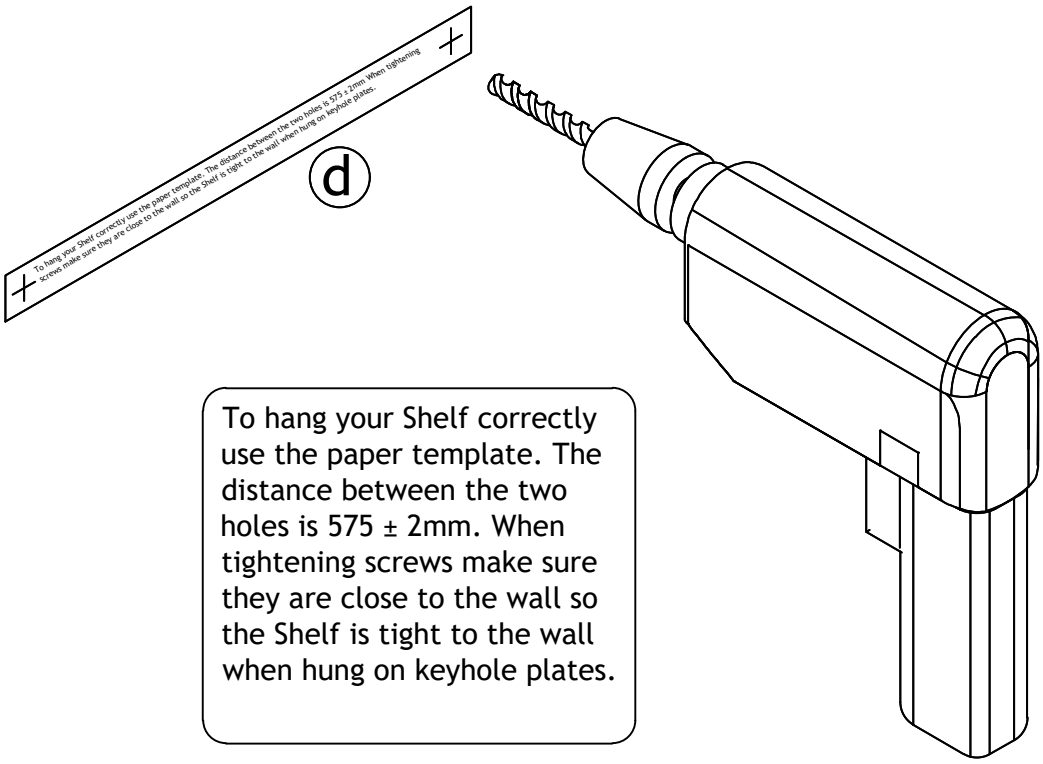

To hang your Shelf correctly use the paper template. The distance between the two holes is 575 ± 2mm. When tightening screws make sure they are close to the wall so the Shelf is tight to the wall when hung on keyhole plates.

How To Hang Your Shelf

Please follow these instructions carefully

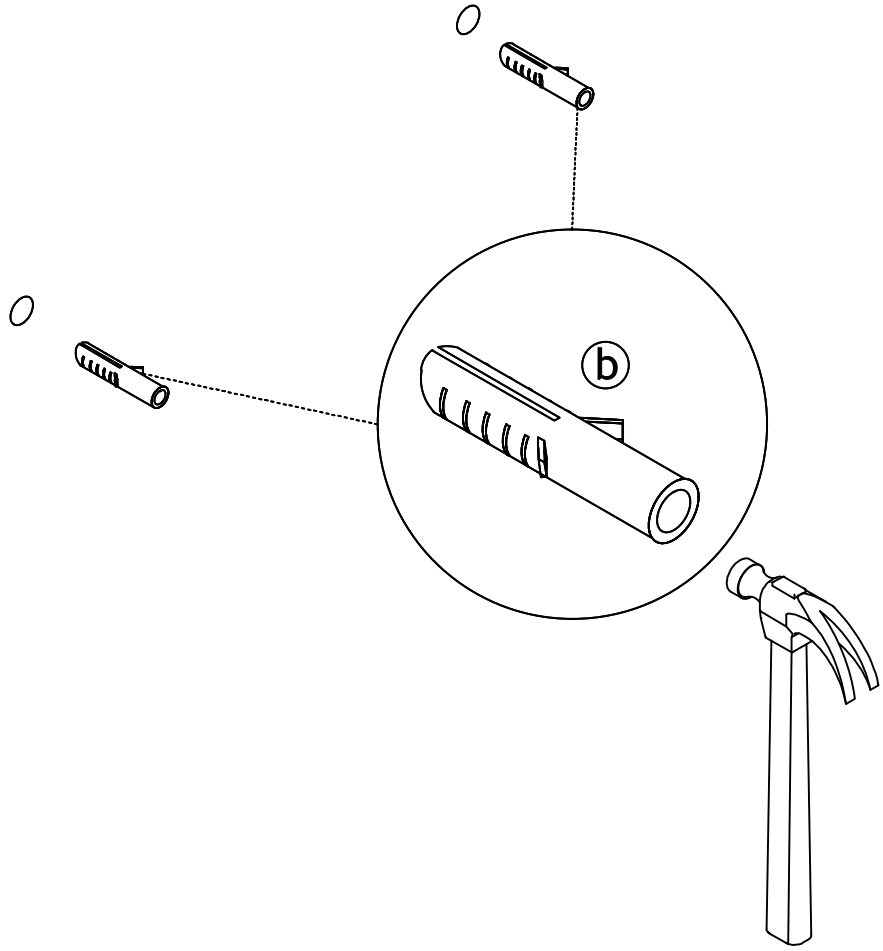

5.

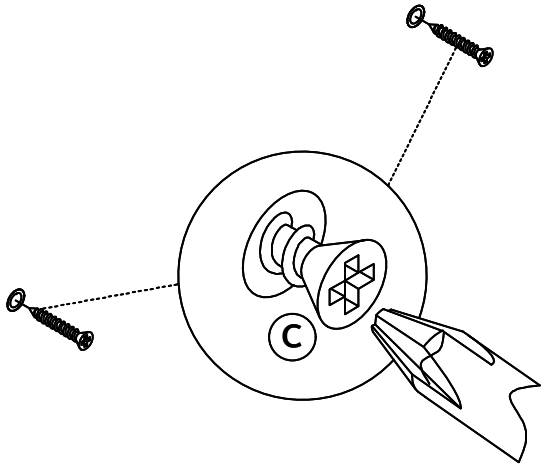

6.

How To Use

Please read carefully

FINISH

Your Shelf is made from solid Oak.

CARE

To clean your Shelf, wipe with a damp cloth followed by a dry cloth.

IMPORTANT

To ensure maximum performance from this product, we advise that you check and tighten all bolts and screws on a regular basis to avoid damage.

GUARANTEE

This instruction leaflet forms part of your guarantee, please retain it. The ROPO number along with your invoice number will need to be quoted in all correspondence with Futon Company.

Thank you for choosing Futon Company.

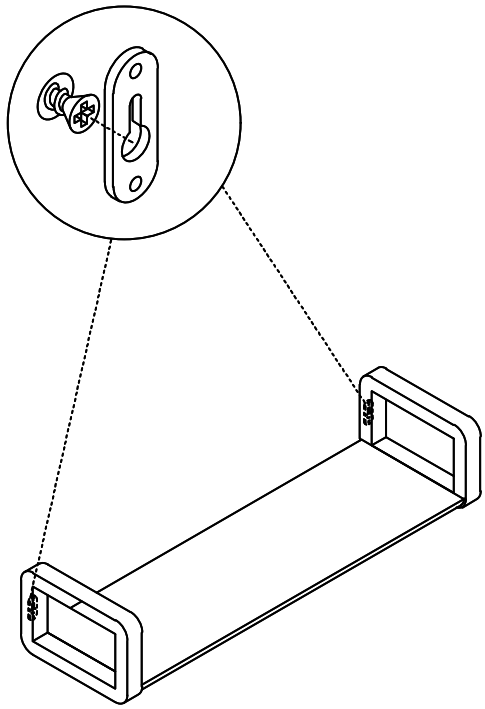

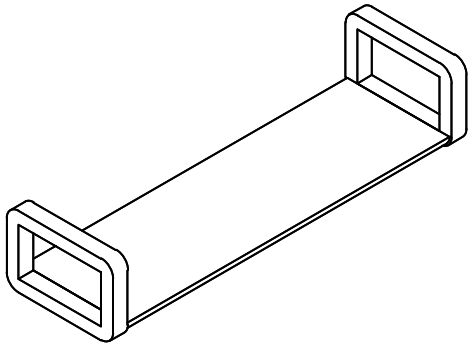

7.