ASSEMBLY INSTRUCTIONS

FUTON COMPANY

T1 HALE NRW DRWS

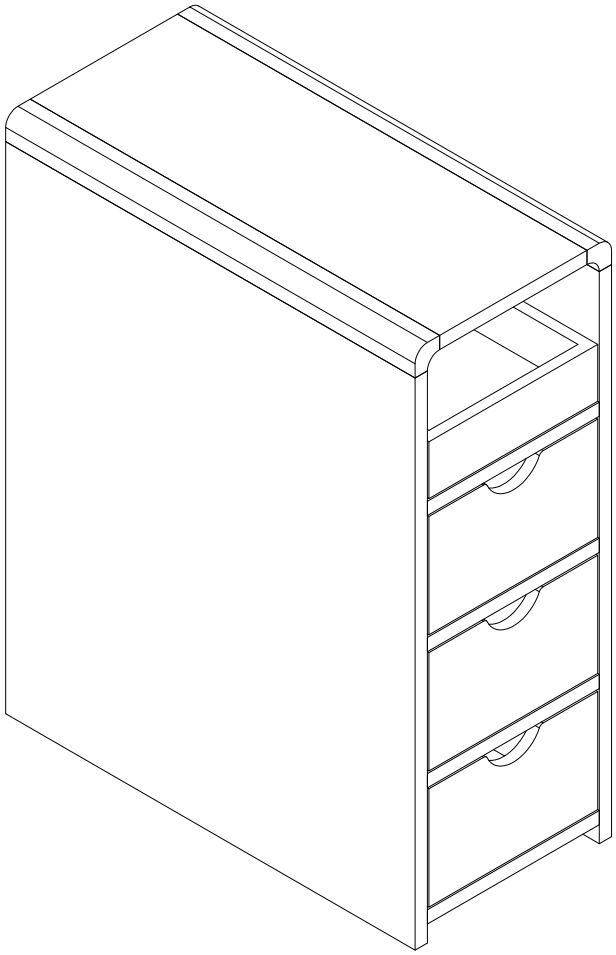

Fittings Checklist

A 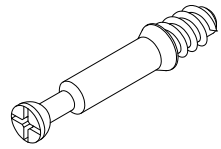 x36	B  x36	C 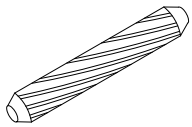 x20	D 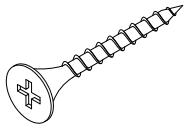 x12
E 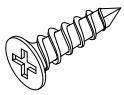 x24	F 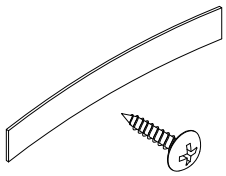 x1	G 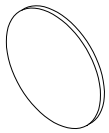 x6	H 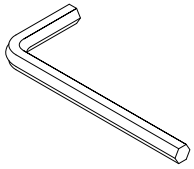 x1
CL 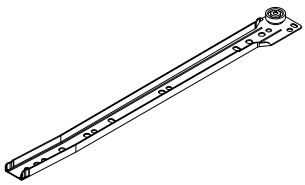 x3	CR 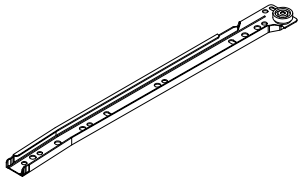 x3	DL 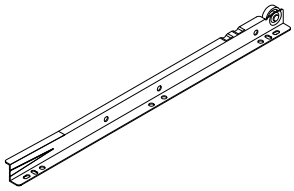 x3	DR 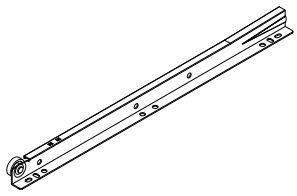 x3

Parts Checklist

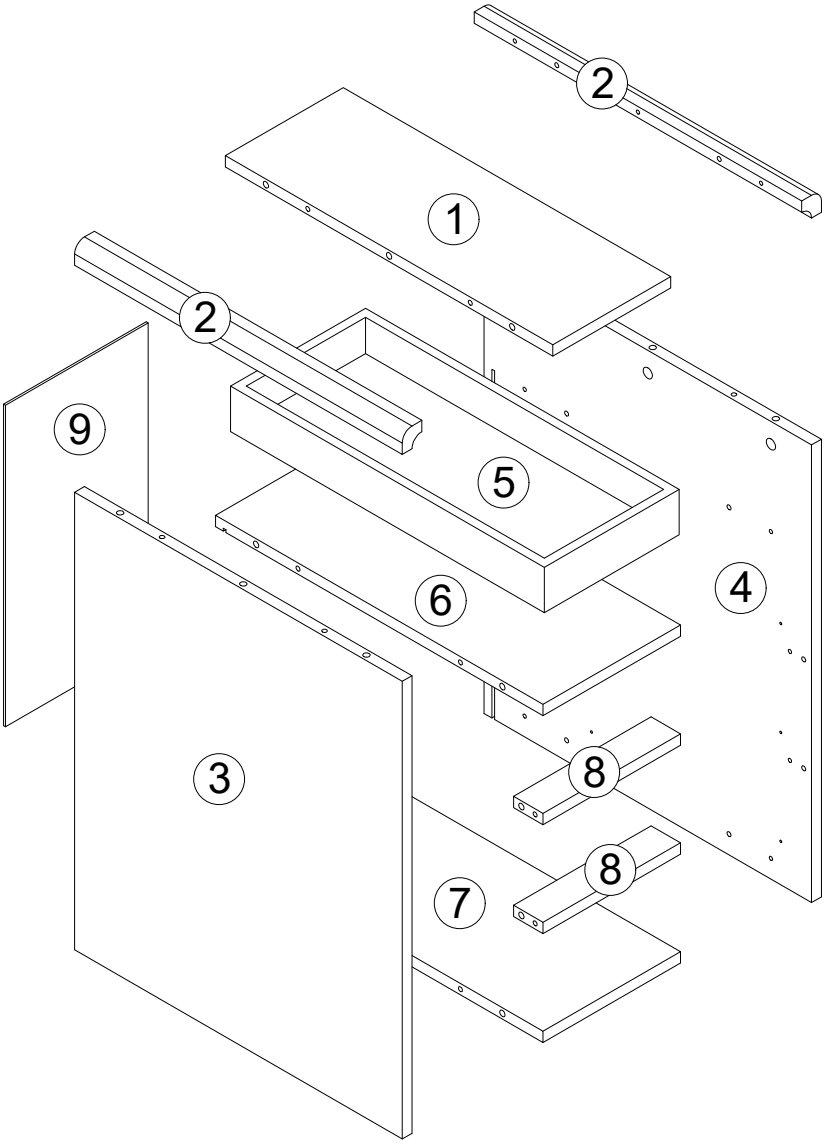

x3

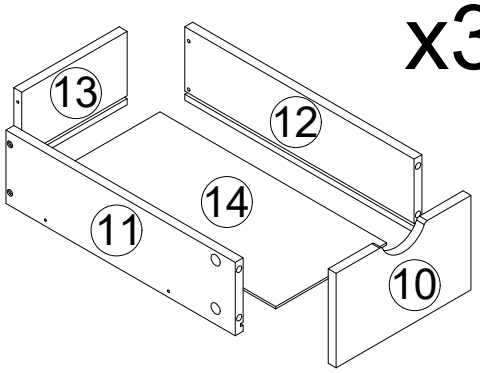

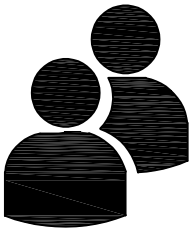

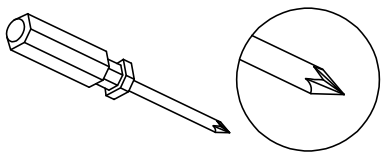

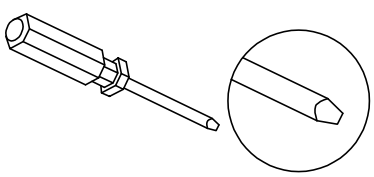

Allow 60 minutes to assemble this item

1 .

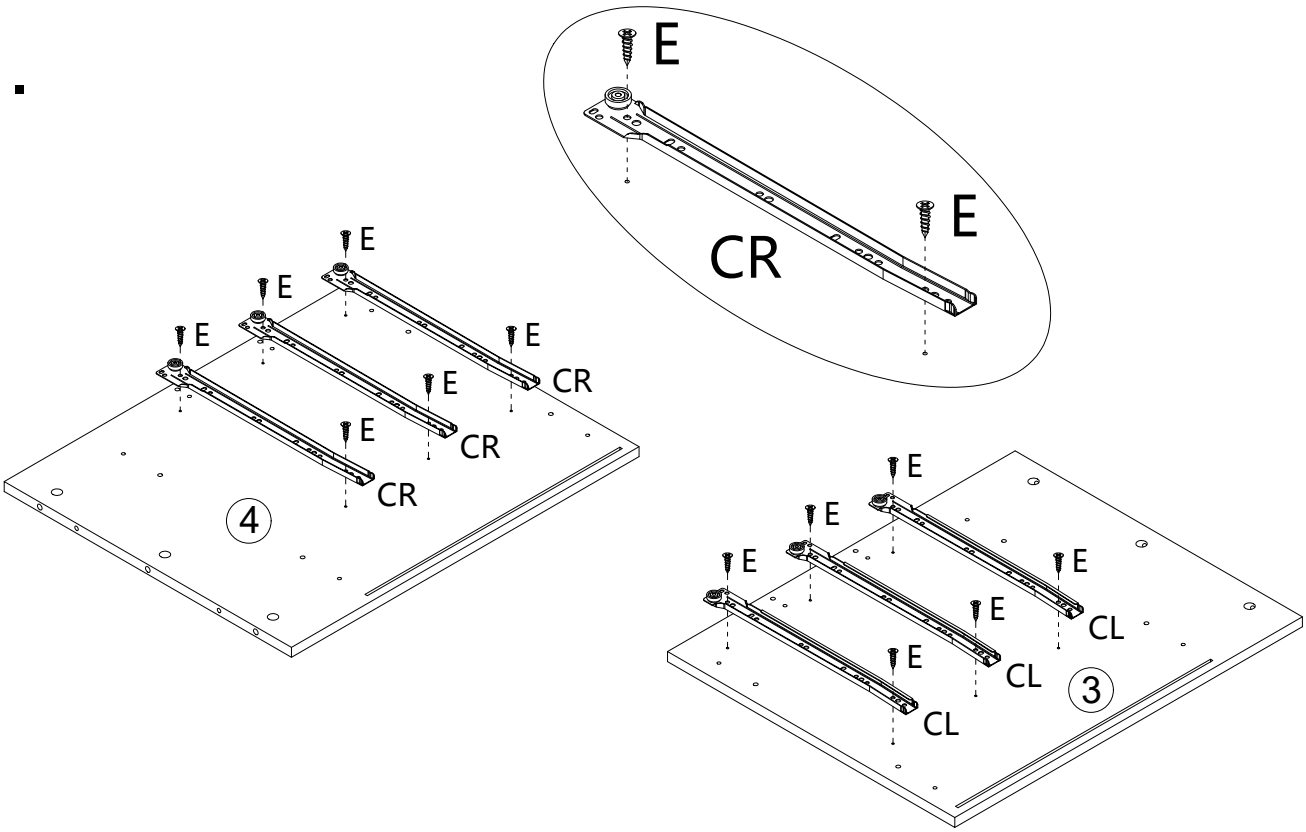
E
E
CR
E
E
E
E
E
E
CR
CR
CR
4
E
E
E
E
E
E
CL
CL
CL
3

2 .

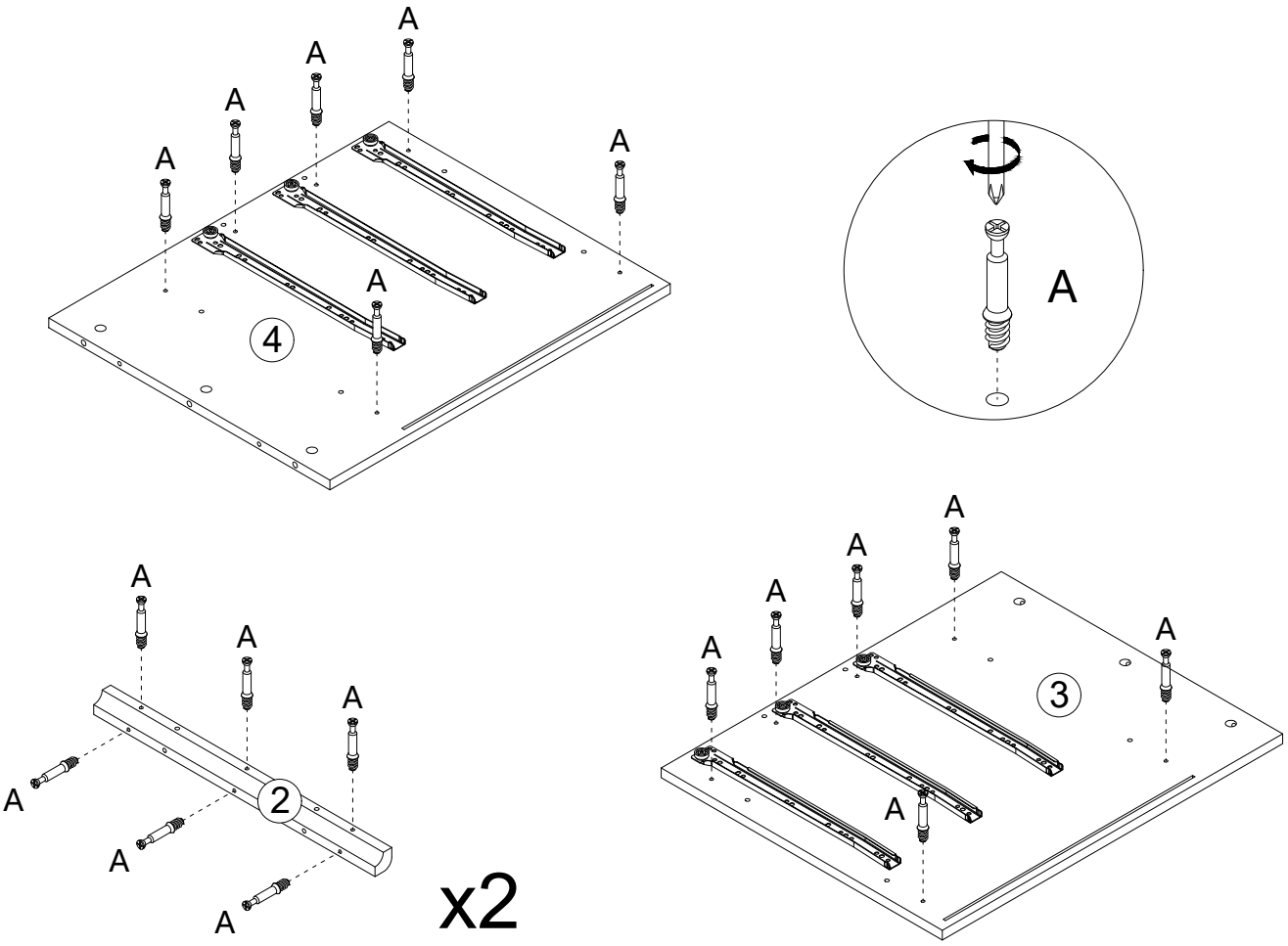
A
A
A
A
A
A
4
A
A
A
A
A
A
A
A
A
A
A
A
A
2
x2
A
A
A
A
A
A
3

3 .

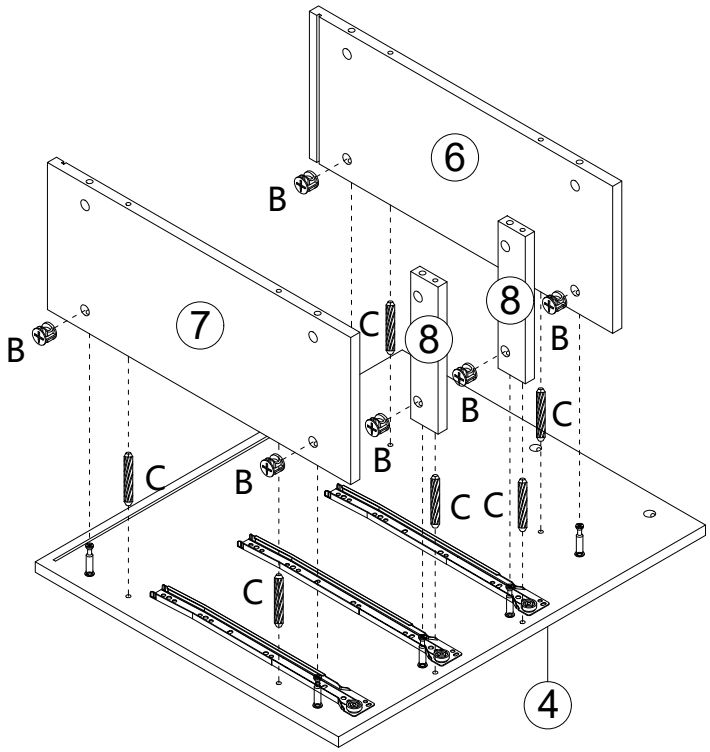

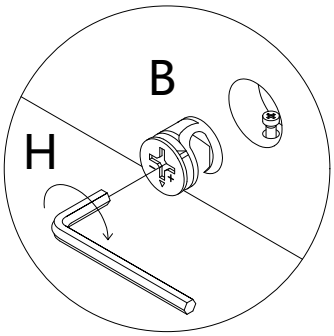

4 .

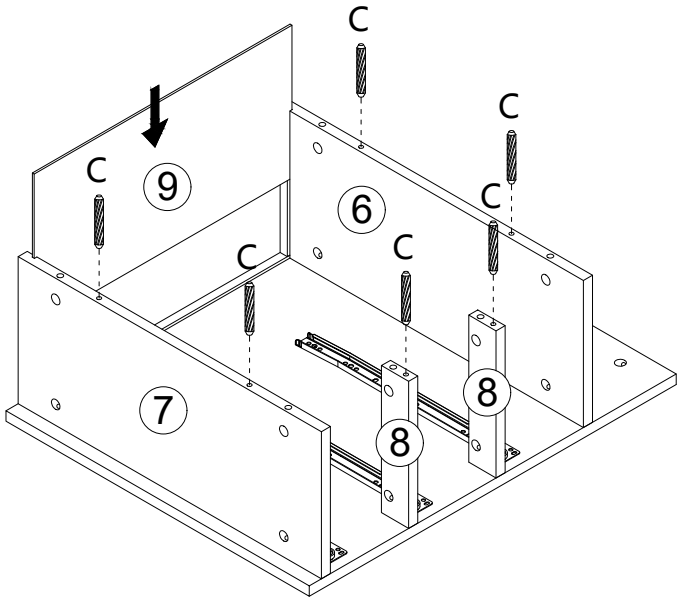

5.

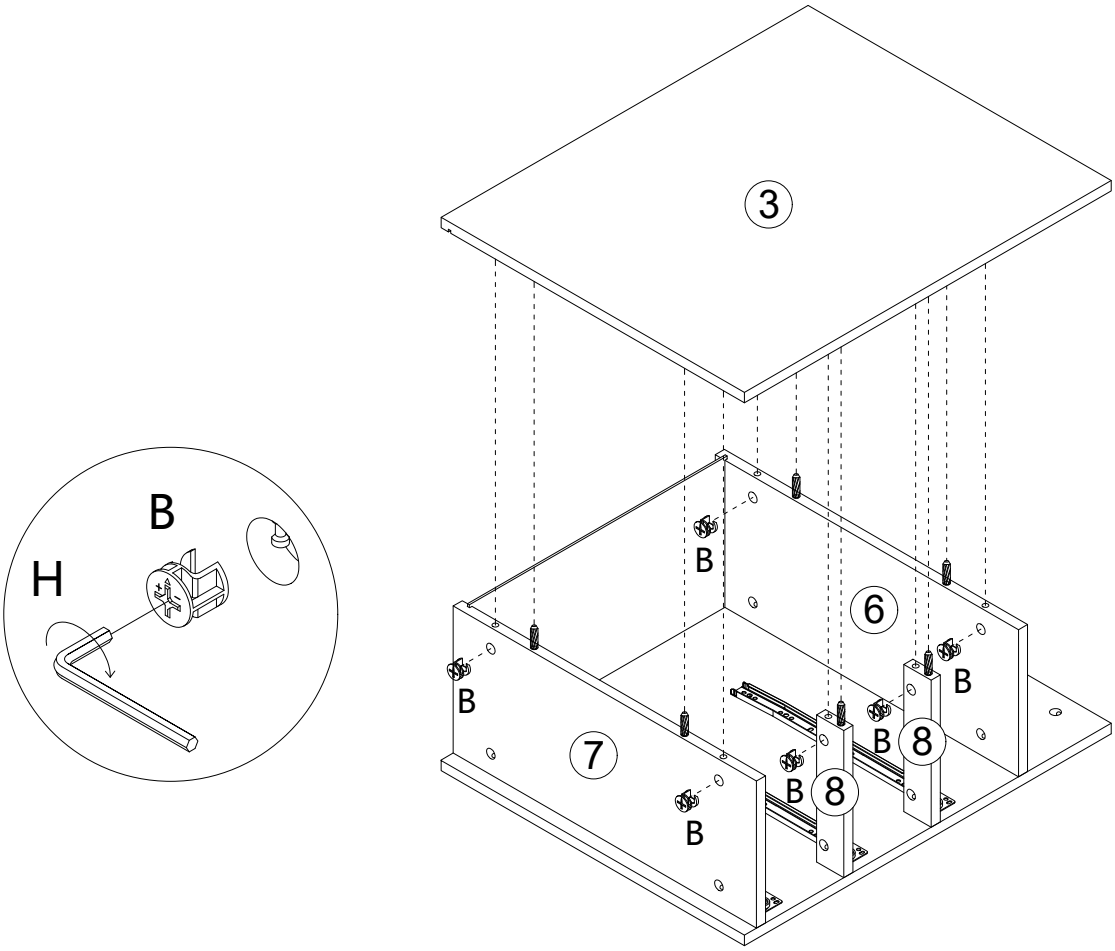

6.

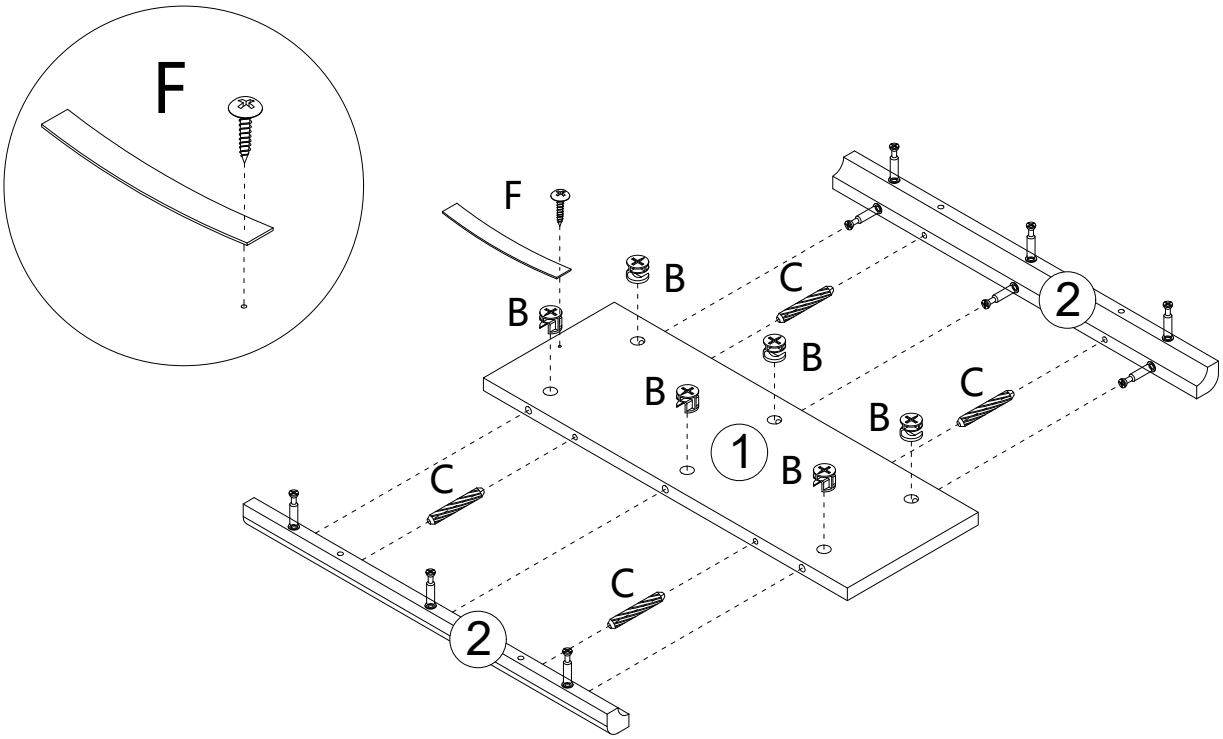

7.

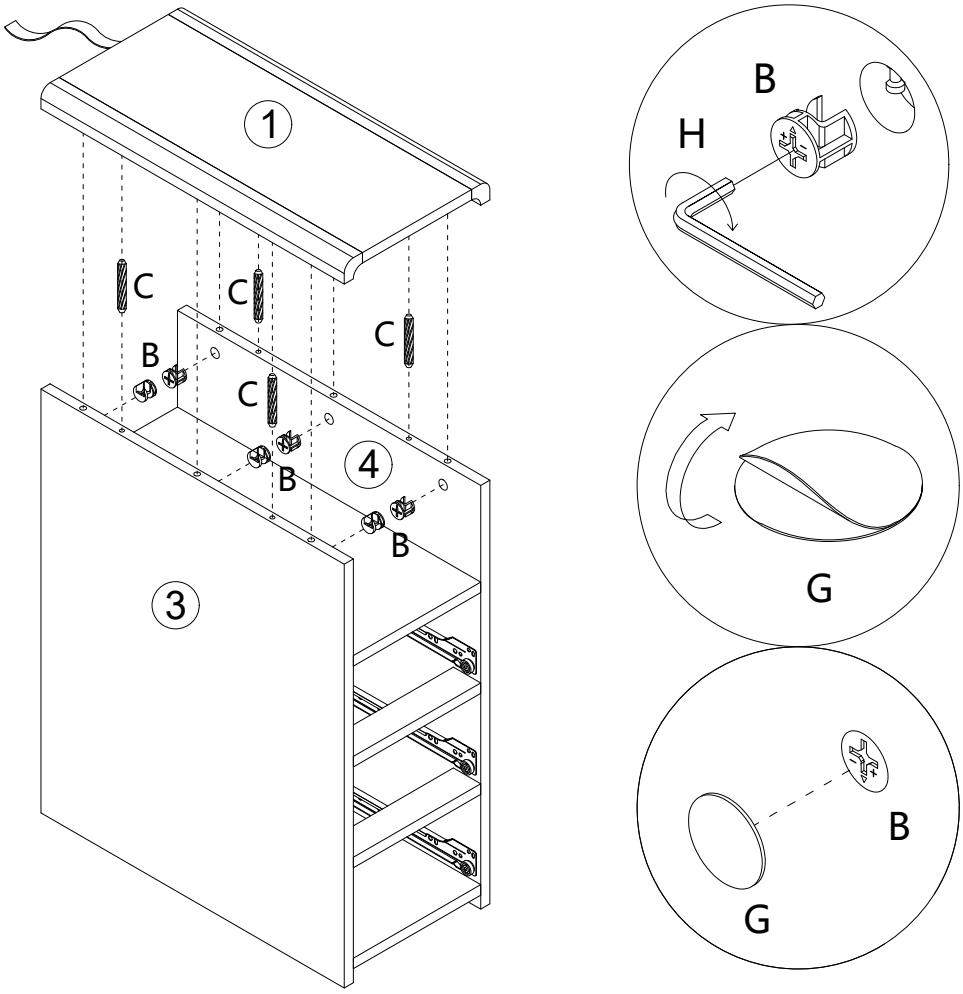

8.

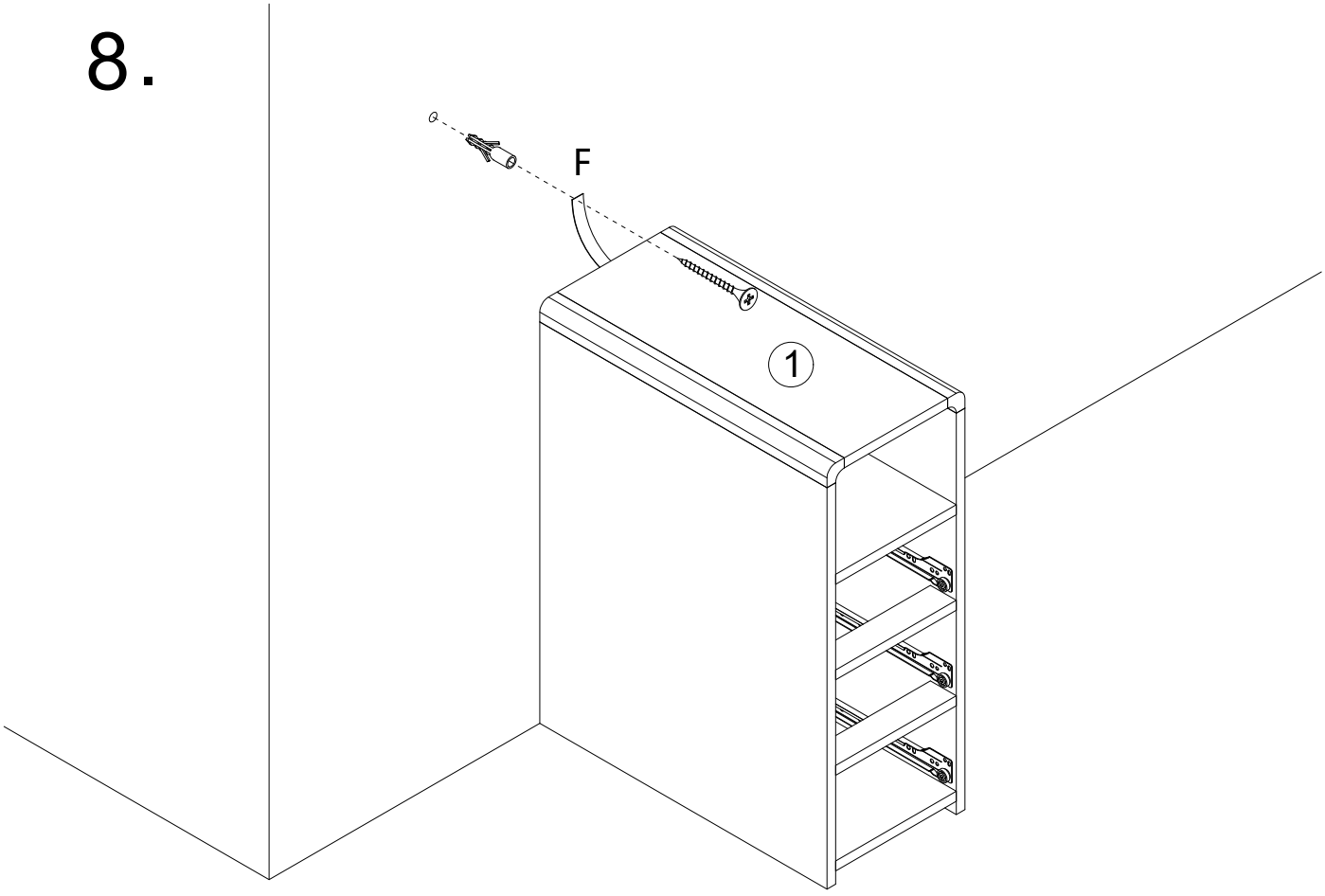

Fitting F should be used to secure your T1 HALE NRW DRWS **to the wall. Screws and fittings for wall are not supplied as different wall constructions require fittings that are suitable for your wall type. If you are unsure for the correct type of fitting for your wall, please contact your local specialised hardware store for information on suitable fitting.**

9. x3

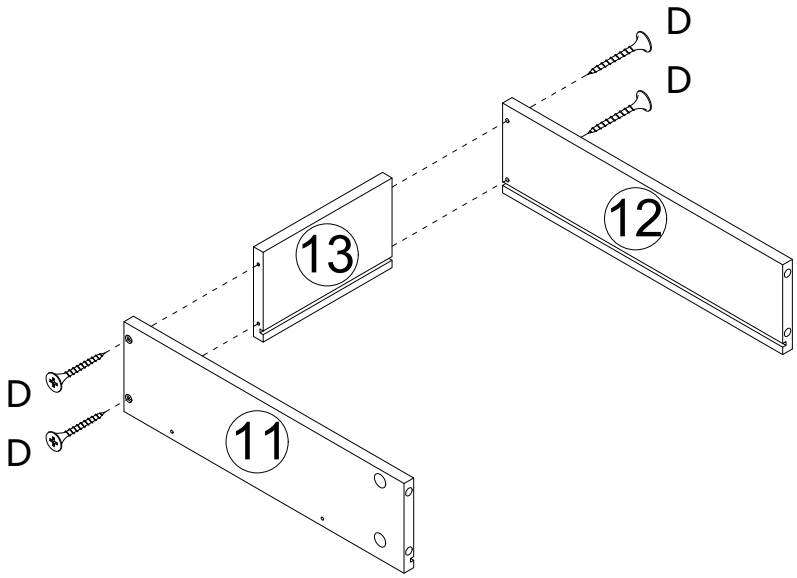

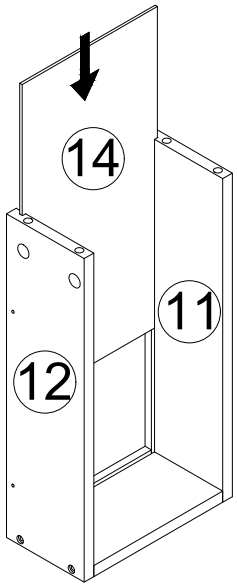

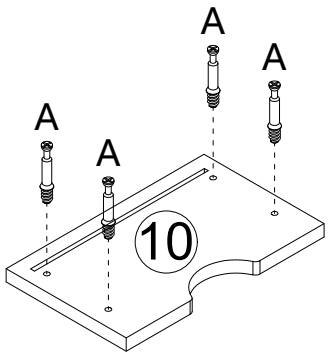

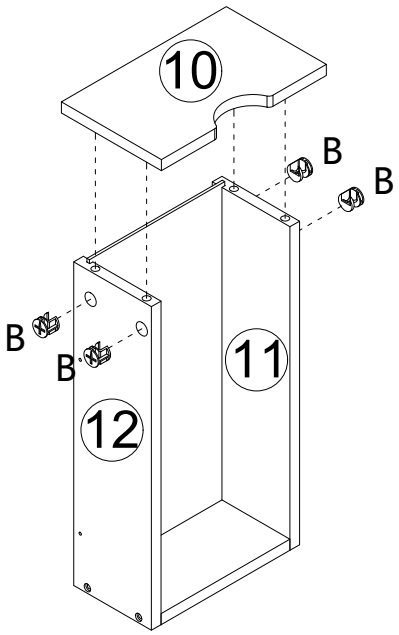

10. x3

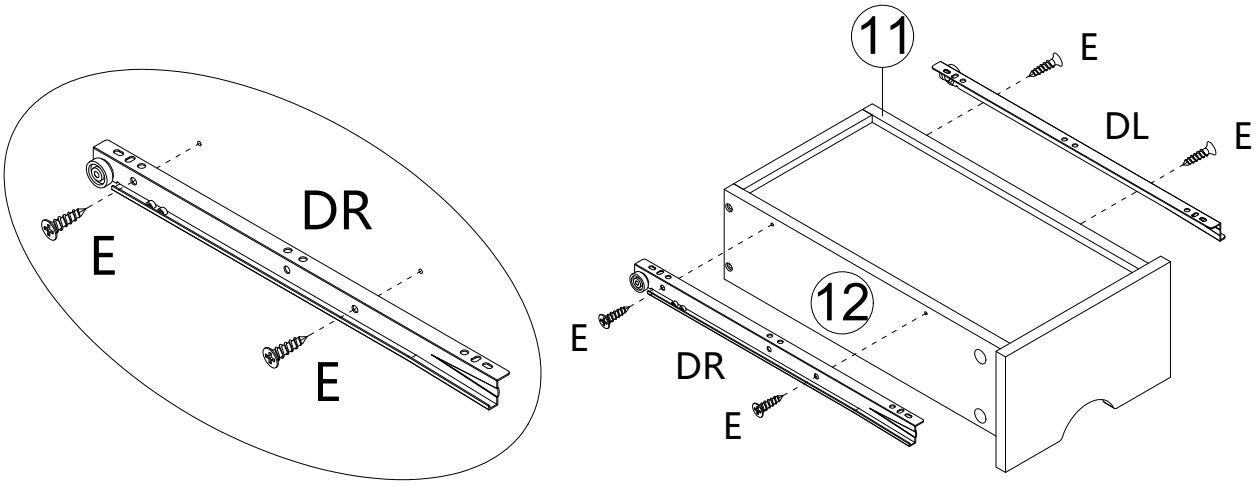

11.

